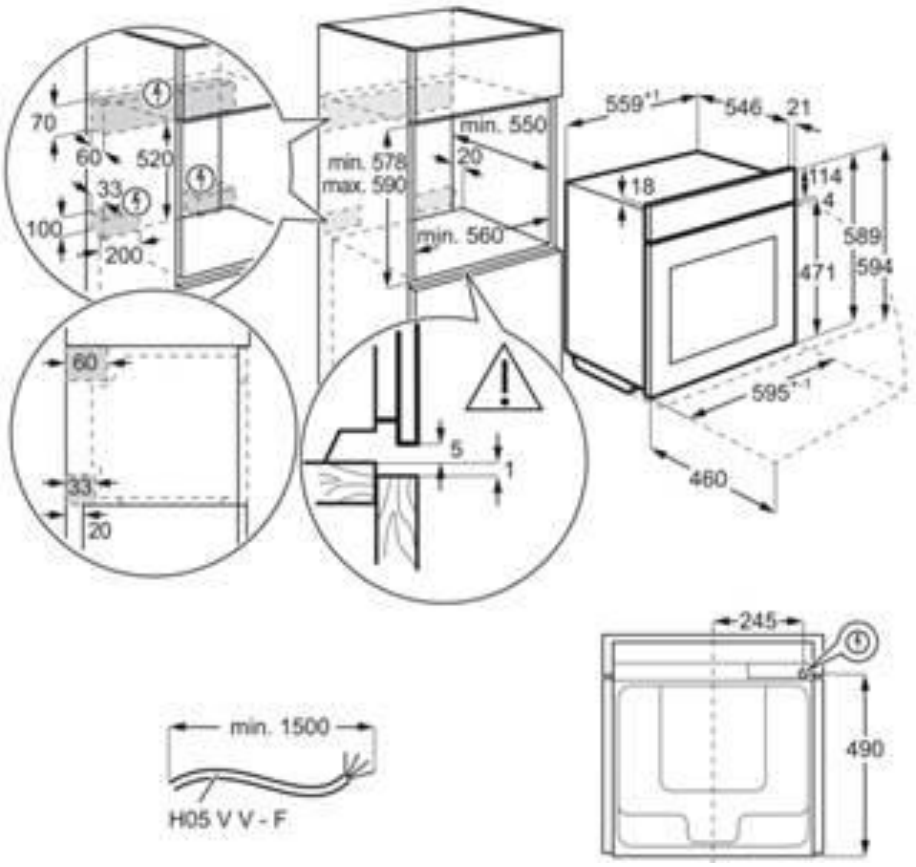PSGBOV180DE0000F